TECHNICAL DOCUMENTATION

TRESPA® METEON®

TS700

Visible (exposed) fixing
with rivets on a metal sub-frame

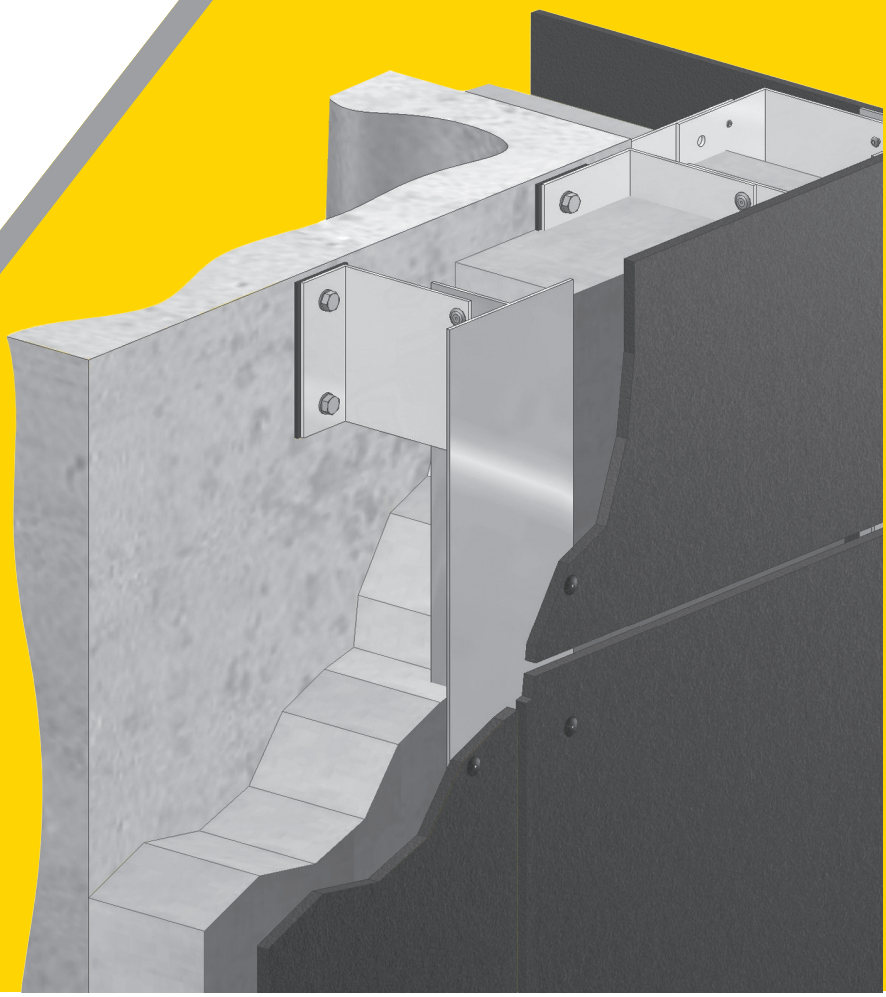

TRESPA®

This system offers an effective solution for installing Trespa® Meteon® panels in a large variety of panel dimensions.

Trespa® Meteon® panels with a minimum thickness of 6 mm may be fixed on a metal sub-frame, using powder coated rivets (available in a wide range of Trespa® colours through third parties). The sub-frame should preferably consist of vertical profiles which are fixed to the structure with special wall brackets.

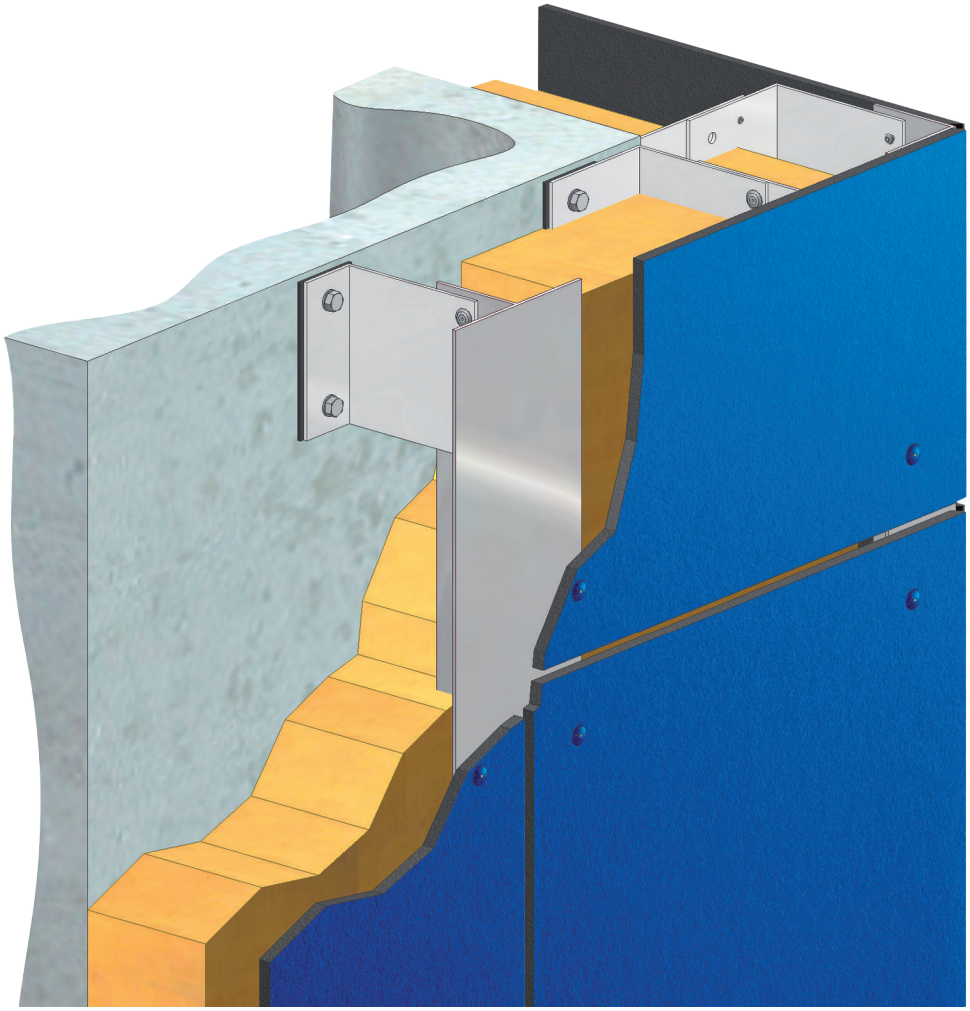

This document is intended to provide general recommendations only. Trespa provides these guidelines and all testing, code and design data for informational purposes only and strongly advises that the customer, project owner and architect seek independent advice from a certified construction professional and/or engineer regarding application and installation as well as compliance with design requirements, applicable codes, laws and regulations, and test standards. Please check your local codes and applicable design requirements for proper use.

EN-GB3058 ▪ Version 4.0 ▪ Date 05-2022

GENERAL INSTALLATION DETAILS

Cavity depth and ventilation

For a continuous ventilation behind the panel, Trespa recommends the free air cavity depth between the rainscreen cladding and the insulation or wall construction to be between 20 and 50 mm, in order to allow for ambient air to flow through from the ventilation inlets and outlets.
Ventilation inlets and outlets must be the equivalent of minimum 50 cm^2 per linear meter over the whole façade. Cavity depth as well as ventilation inlets and outlets must be in accordance with applicable building standards, regulations and certificates.

Subframe

Trespa® Meteon® panels must be installed on a subframe of sufficient strength and permanent durability. Quality and/or treatment of the sub-frame must be in accordance with applicable building standards, regulations and certificates.

Fixing detail

- Shank diameter of the rivet is 5 mm.
- Head diameter of the rivet is 16 mm.
- Hole diameter for fixed point is 5.1 mm.
- Hole diameter for sliding points in the panel is 10 mm.
- The rivet head should be 0.3 mm free from the panel surface by using a special tool (spacer nosepiece).*
- Rivets must always be centered in the holes.
- To retain the panel position, each panel must have one fixed point in the centre of the panel.
  All other fixing points are sliding points.

** Rivets and special tool(s) should be made by the same manufacturer.*

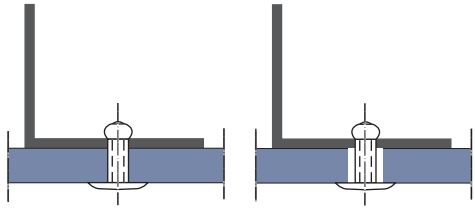

Fixed point *Sliding point*

EN-GB3058 ▪ Version 4.0 ▪ Date 05-2022

TECHNICAL INSTALLATION DETAILS

The following tables give an overview of some of the most significant technical design and installation details:

In certain countries specific (certification) requirements may apply. Please refer to **www.trespa.info** for an overview of available certificates. For countries in which no certificate for such fixing system is available and/or required, the information given in this document is to be considered as a general guidance.

MINIMUM DIMENSIONS SUBFRAME (IN MM)	
METAL RAIL WIDTH	
Intermediate / end rails	40
Jointing rails	100

PANEL THICKNESS (IN MM)[A]
6, 8, 10

[A] *13 mm may be applied in certain circumstances, please contact your local Trespa representative.*

MAXIMUM PANEL DIMENSION (IN MM)[B]
3050 in the length, 3412 diagonal

[B] *For other panel dimensions, please consult the certificate.*

JOINT WIDTH (IN MM)[C]
10

[C] *For other joint width, please consult the certificate.*

Based on applicable building standards, regulations or certificates, wider joints may be permissible.

EDGE CLEARANCE
Min. 20 mm and max. 10 x panel thickness

TECHNICAL INSTALLATION DETAILS

MAXIMUM FIXING DISTANCES (IN MM)[D,E]							
FOR	ALL FINISHES EXCEPT SPECULAR				FINISHES IN SPECULAR[F]		
	PANEL THICKNESS						
	6	8	10	13	8	10	13
2 fixings in 1 direction	450	600	750	950	450	550	750
3 or more fixings in 1 direction	550	750	900	1200	550	700	900
3 or more fixings in 1 direction[G]	600	700	800	800	550	700	700

[D] ***Fixing distances for soffit application must be multiplied by 0,75.***

[E] *The maximum permitted fixing distances shown have been designed with a maximum (wind-)load of 600 N/m² and a maximum deflection of L/200.*

[F] *Based on surface properties of Specular panels fixing distances are reduced.*

[G] *Applicable for Germany.*

Fixing distances must be calculated in accordance with applicable local standards, regulations and certificates and should be verified by a structural engineer.
For more information about deflection and wind loads, please visit **www.trespa.info**

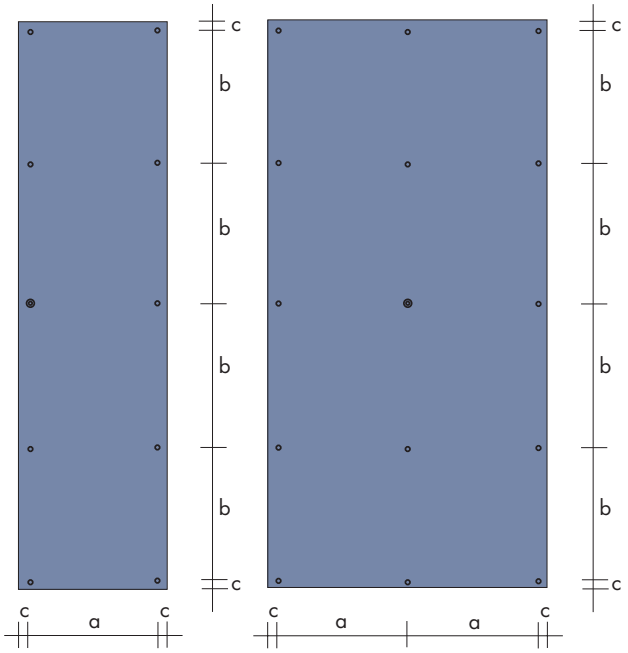

a = Horizontal fixing distance

b = Vertical fixing distance

c = Edge clearance

◉ = *Fixed point in panel centre*

○ = *Sliding point*

EN-GB3058 ▪ Version 4.0 ▪ Date 05-2022

Horizontal cross-section

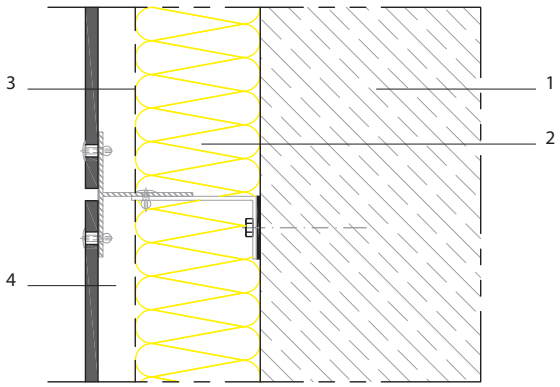

1. Load bearing wall (concrete, masonry)

2. Thermal insulation

3. Weather barrier (vapour permeable)

4. Ventilated cavity

5. Trespa® Meteon® panel

6. Vertical aluminium rail

7. Wall bracket

8. Rivet

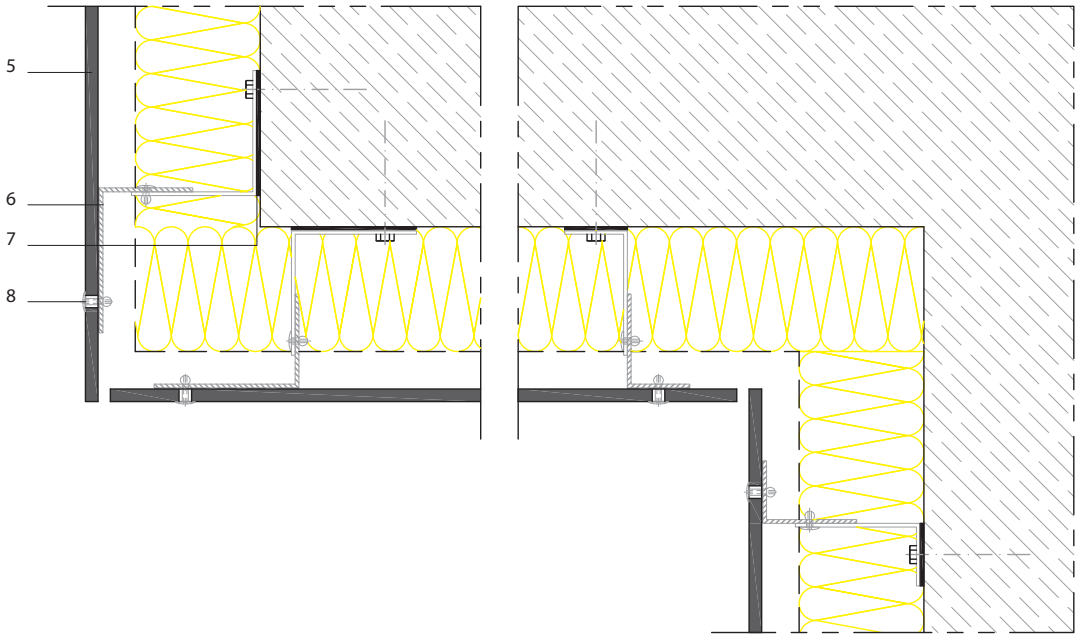

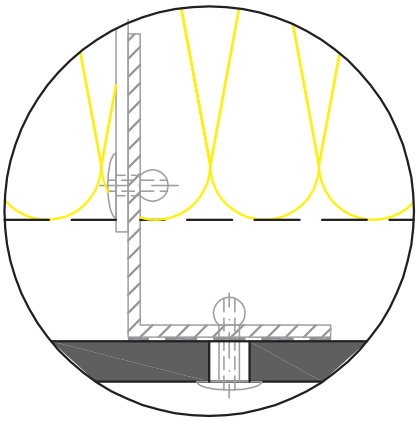

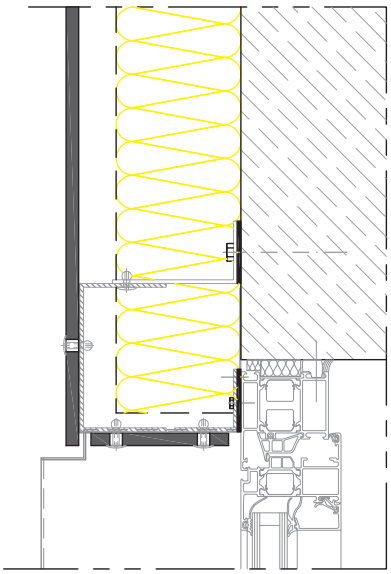

Vertical cross-section

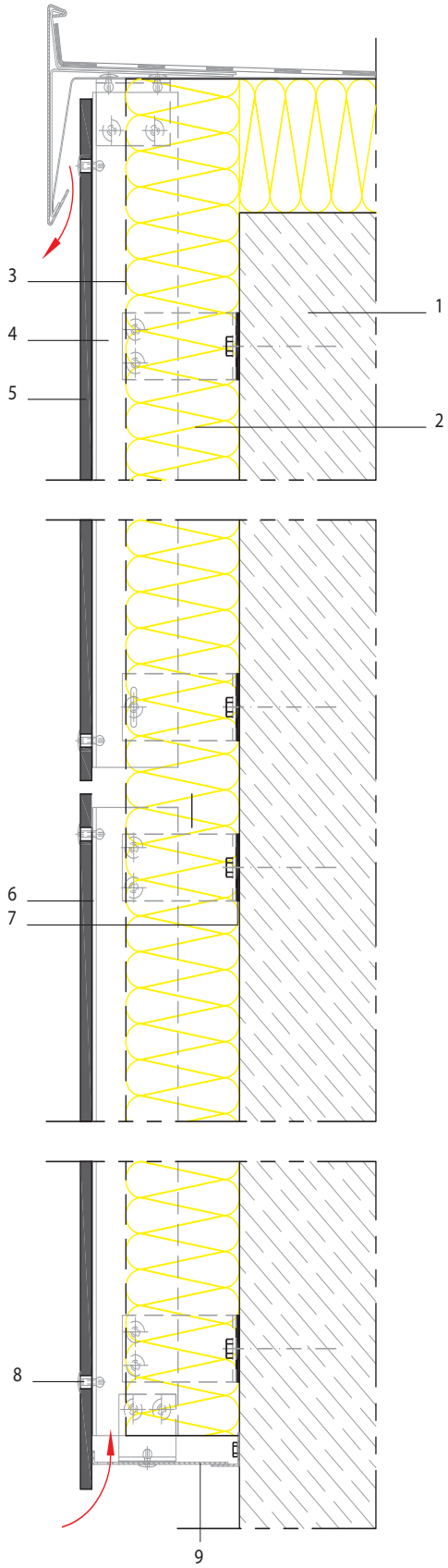

1. Load bearing wall (concrete, masonry)

2. Thermal insulation

*3. Weather barrier (vapour permeable) **

4. Ventilated cavity

5. Trespa® Meteon® panel

6. Vertical aluminium rail

7. Wall bracket

8. Rivet

9. Ventilation profile

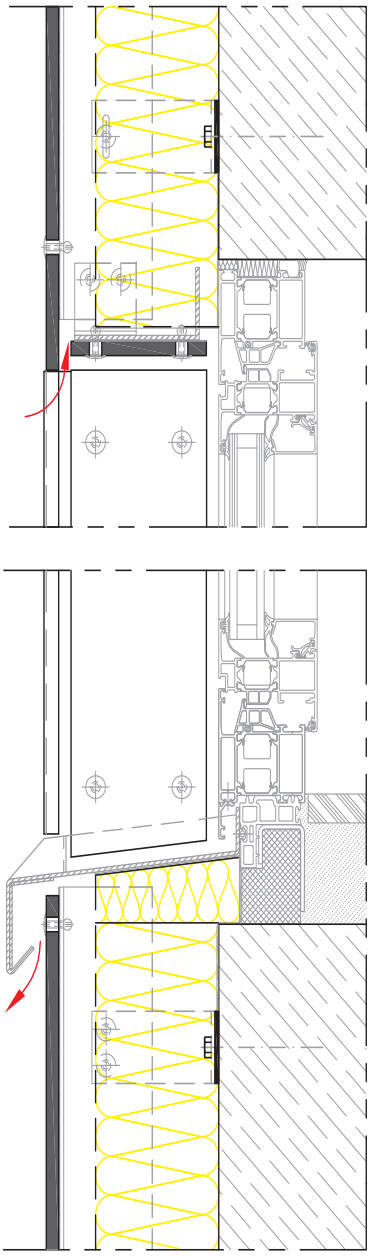

DISCLAIMER

This is a print generated by you from www.trespa.info ("Website"). By accessing the Website and printing this document you have accepted the Terms of Use of the Website. Please refer to the Website for all conditions that apply to this document. The system shown in this document may not be suitable for all applications and jurisdictions. We provide you with testing data and certification information for informational purposes only. We strongly recommend that you or any other user of this document obtains advice regarding compliance with design requirements, applicable codes, laws and regulations, and test standards from independent experts. Please check your local codes and design requirements for proper use. Trespa will not accept any liability in relation to your use of this document.

All oral and written statements, offers, quotations, sales, supplies, deliveries and/or agreements and all related activities of Trespa are governed by the Trespa General Terms and Conditions of Sale (Algemene verkoopvoorwaarden Trespa International B.V.) filed with the Chamber of Commerce (NL) on 20 February 2015 under number 24270677, which can be found on and downloaded from the Trespa website, www.trespa.com.

All oral and written statements, offers, quotations, sales, supplies, deliveries and/or agreements and all related work of Trespa North America, Ltd. are governed by the Trespa North America General Terms and Conditions of Sale, which can be found on and downloaded from the Trespa website, www.trespa.com/documentation. A copy of these general conditions of sale will be provided free of charge on request. All general terms and conditions other than the conditions mentioned above are dismissed and do not apply, regardless of whether such terms and conditions are referred to on requests for offers, offer confirmations, stationery and/or other documents of the other party, even if Trespa does not expressly object to such terms and conditions.

EN-GB3058 ▪ Version 4.0 ▪ Date 05-2022